creo®

SIGNS YOU'VE OUTGROWN YOUR CAD SYSTEM

You've changed - your CAD system hasn't



ptc

ENGINEERING HAS EVOLVED. DON'T LET CAD SLOW YOU DOWN.

You've sensed for a while now that your CAD product didn't put you first. When your model took so much time to load, you knew where you stood. That hard-to-use interface was a sign you couldn't ignore. You and your CAD system haven't done anything new together in ages. The time has come to ask whether you're getting what you need from your present CAD tool.

Don't settle. Consider Creo, the system that takes your work as seriously as you do. For close to 40 years, PTC has continued to bring innovation to parametric modeling, making Creo the premier 3D CAD tool.

Creo is behind products manufactured by some of the world's most established companies and some of the newest – and smallest. It's a single, integrated solution with the tools and capabilities you need to design and develop products from concept through to production. Thanks to Creo's stability, in-context learning, and speed, you're always in charge. Want to integrate models made in other software? **Do it. By the way, Creo is an open system. Always has been. Always will be.**

Creo keeps getting better. Each release brings you productivity improvements, enhancements to core functionality, and the opportunity to integrate emerging technologies into your workflow.

Your product information is worth more with Creo. We've closely integrated Creo with Windchill, so that your up-to-the-minute design data gets to those who need it, wherever they are, in a form they can use. That's the power of the digital thread.

Creo. Engineered to save you time. With your CAD model at the center.

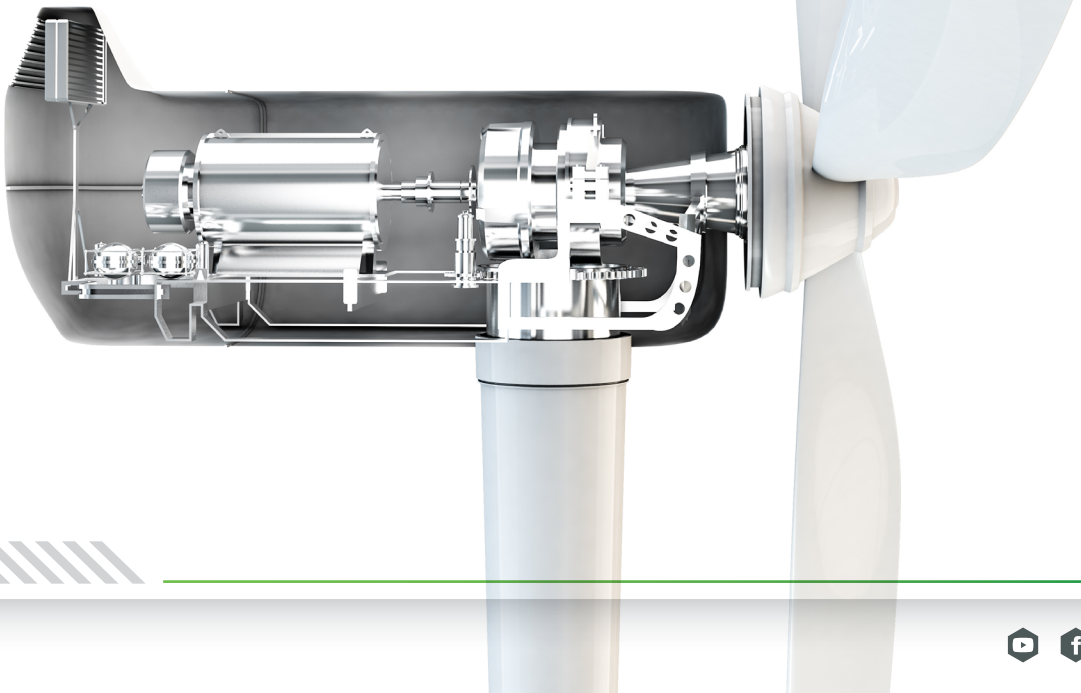

> PERFORMANCE

You'd replace your desk chair if it spontaneously dumped you out on a regular basis. What's stopping you from applying the same thinking to your software? **Here's an idea: stop making excuses for a critical tool that collapses when you most need it.**

We're proud of the fact that Creo handles assemblies as large as hundreds of thousands of components, whether it's loading the assembly or regenerating changes. With Creo, you can retrieve your assembly and get started faster. While the assembly loads, you see a simplified rep. Search your model tree with a single 'right click'. Use 'View Changes' to quickly and easily find what's been modified in your assembly. It's just as easy to restructure, rename, or reorder components. Streamlined new component placement constraints and more intuitive commands accelerate your detailed design process.

With a suite of Advanced Assembly Design features -- from skeleton models to update-control enabled data sharing -- you have essential tools for efficient and productive concurrent engineering of complex assembly designs.

> MULTIBODY

Don't make modeling more complex than it needs to be. Use multibody design.

Multibody capabilities mean that, at the point where solid geometry from a feature intersects with solid geometry from a part, you can choose for that geometry to be in its own separate body. The implication is that, within a single part, you can separately manage, visualize, and design multiple geometric volumes as individual objects – instead of designing an assembly.

You can assign bodies separate materials or appearances. You can also use them in advanced modeling practices that might involve family tables, the attachment of persistent parameters, and propagation of these attributes along with bodies to other parts.

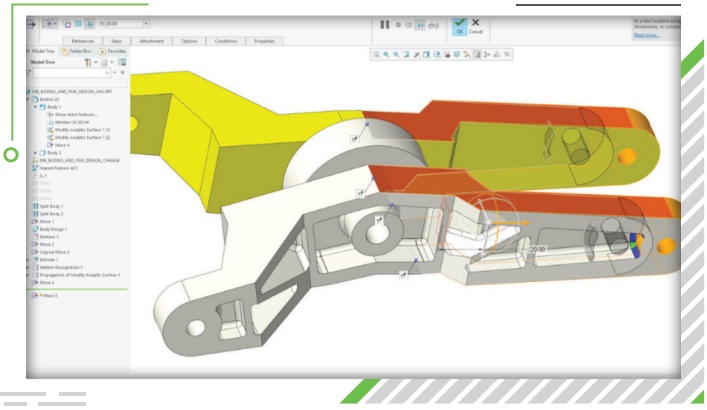

> DIRECT MODELING

You still remember the name of the colleague from marketing who needed that late-stage design change on a Friday afternoon. Creo's flexible modeling capabilities mean you'll never again get stuck rebuilding a model because you couldn't update it without breaking the original constraints. Instead, select and edit geometry and get back to doing what you need to do.

When you make fast edits to complex geometry, the software automatically honors and intelligently handles recognized design intent such as rounds, chamfers, and geometry patterns. Every modification that you make is propagated with full associativity so that your entire design and all downstream deliverables will update.

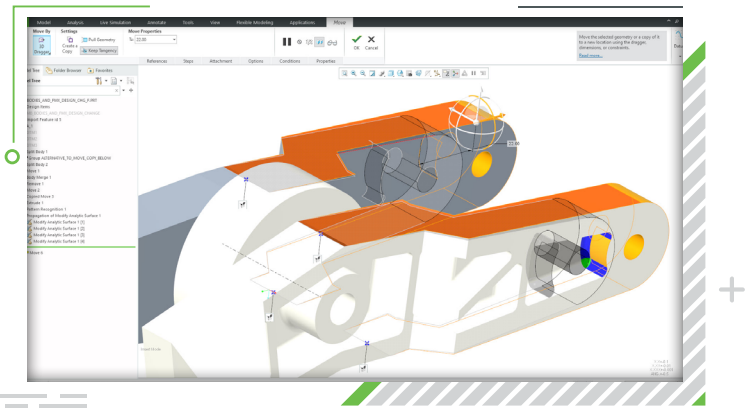

> SHEETMETAL

You will never find yourself in a hole (unless you choose to create one in your design) with Creo's sheetmetal capabilities. You can create bends, rips, punches, and many other features. You can even make fast edits to bends, reliefs, corner seams, and forms in sheetmetal designs using flexible modeling. Then export everything from Creo straight to DXF or DWG formats. Everything you need is in one product.

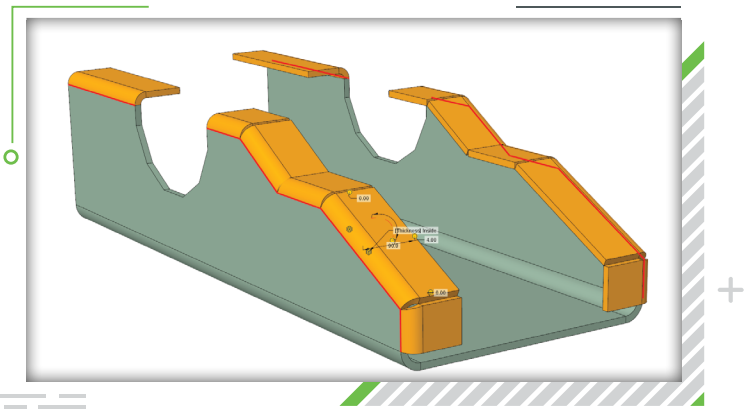

> USER EXPERIENCE AND USER INTERFACE DESIGN (UX/UI)

No matter what improvements we make, you'll find the same familiar Creo interface with simple intuitive workflows and a layout built on Microsoft Office, specifically:

- Modern datum display for easier orientation in 3D space.
- Dynamic geometry preview while editing and creating.
- Access to commands directly on the 3D model for a more immersive, efficient experience.
- Ability to customize interface layout: dialogues and panels can be floated and docked as you see fit.
- What's New highlights show you the newest features integrated into Creo

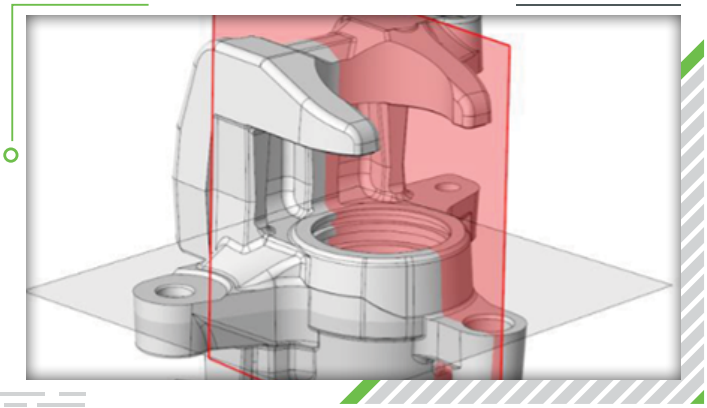

> MODEL TREE ENHANCEMENTS

We've made it easier to document design intent when you're working with many surfaces. The design items folder inside Creo now lets you capture the design intent of the model independently of the feature history tree. You have:

- A Model Tree that is separate from the Design Items tree.
- A Design Items folder which you can organize exactly as you wish.
- The ability to organize bodies and quilts in Custom Groups.

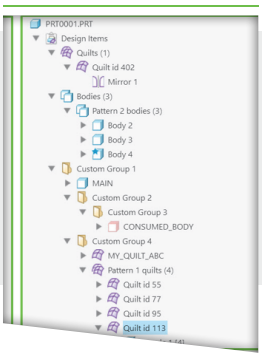

> SNAPSHOTS

Sometimes you need to understand how a model was built. With the Snapshot feature, what used to be a baffling chore is now easy. Select the feature, right click in the model tree, and choose 'Show Snapshot'. You get a quick view into the model at that point in time, and you can reuse any of the geometry from that point in time in a couple of clicks – no need to roll back the model.

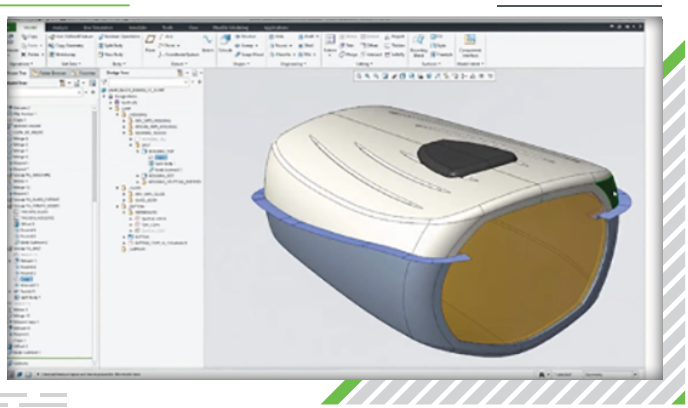

> MODEL-BASED DEFINITION (MBD)

No matter where you are on your MBD journey, Creo can help you create a 3D CAD model that becomes a single source of truth for your entire enterprise from the executive offices to the shop floor. Anyone can interrogate the model using either CAD software or a simple plug-and-play viewer. The alternative is to find yourself in the business of managing fast moving changes or confusion.

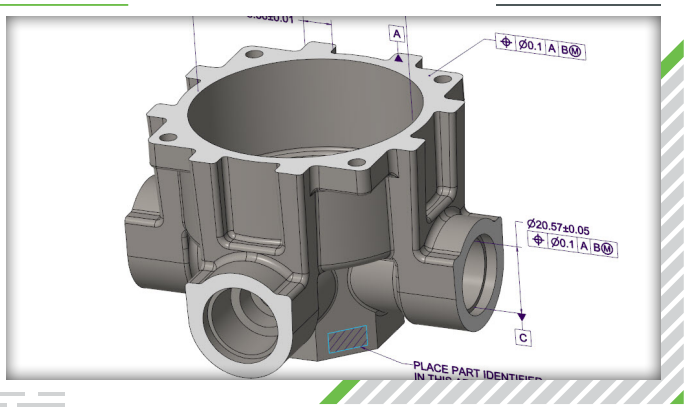

> GEOMETRIC DIMENSIONING & TOLERANCING

Confidence shows. With GD&T Advisor, you get expert guidance on the application and validation of geometric dimensioning and tolerancing based on the latest ISO and ASME standards. When your model is complete, you can be confident that it complies with the relevant standard and is fully constrained.

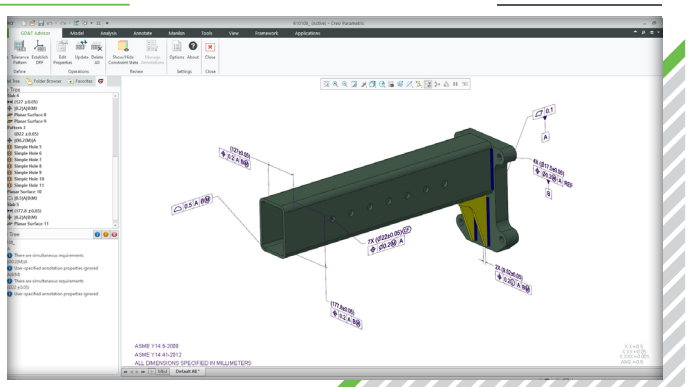

> TOLERANCE ANALYSIS

Creo EZ Tolerance Analysis means you can easily analyze, visualize, and understand the geometric tolerance stack-up and dimensional variation that have an impact on your design.

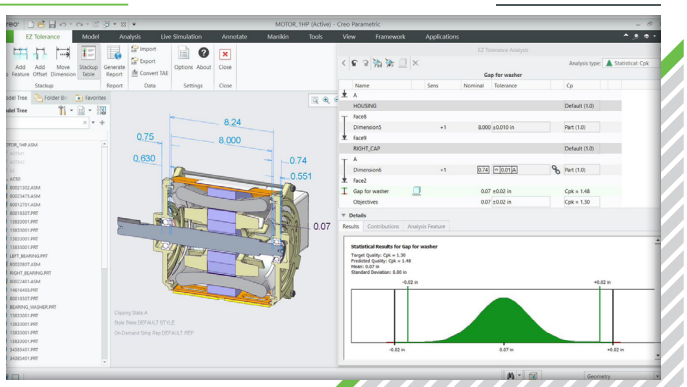

EMERGING TECHNOLOGIES - DON'T MISS OUT!

The way not to get left behind is to use tools that don't leave you behind. We integrate emerging technologies into the Creo design environment for two reasons: to accelerate your design process and give you the chance to think differently about how you approach problems and opportunities in design.

> AI-ASSISTED CAD

Your CAD software should work harder for you, not the other way around. If you've spent more time searching for a command or resolving an reference error than solving the engineering problem itself, you're not alone.

Artificial Intelligence is making engineering software smarter by helping users access information, learn new workflows, and accomplish tasks faster. Instead of interrupting your work to search documentation, gather model dimensions, or track down the cause of a failed feature, AI can deliver answers and guidance in the moment.

The Creo AI Assistant brings that capability directly into your CAD environment. Ask questions in natural language, get contextual assistance, discover helpful new workflows, and quickly access the information you need to keep moving. It's another way Creo helps you spend less time navigating software and more time engineering great products.

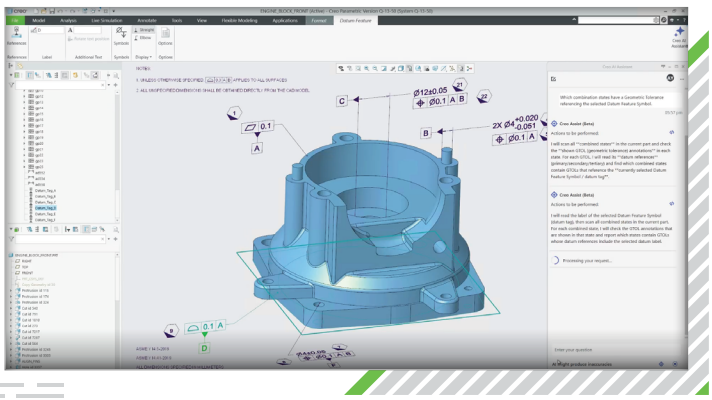

> SIMULATION-DRIVEN DESIGN

You want your design to meet its operating environment requirements. Clear enough. Simulation-driven design operates on the principle that you should not have to wait until the end of your design process to find out if you succeeded.

Instead, you should have the ability to enjoy risk-free iteration and solve major problems using intuitive tools as you go. When your model gets to the analysts' desks, you'll have sidestepped the easily avoidable errors, allowing them to focus on the major problems they were hired to solve.

With Creo Simulation Live (CSL), you get instant feedback on your decisions as you work. The simulation tool runs in the background. No extra windows or clicks needed. You can see how your design might perform under real-world conditions in seconds, not days or weeks. If you want real-time design guidance, use CSL.

Our Ansys-powered solutions, Creo Ansys Simulation (CAS) and Creo Ansys Simulation Advanced (CASA) drive simulation-led design to new levels. While both are built for design refinement and validation, CASA has the added benefit of supporting use cases like nonlinear contact and non-linear materials. CASA also allows you to run combined structural and thermal studies.



> AI-POWERED GENERATIVE DESIGN

Explore design options you might not have had time to consider.

With AI-powered generative design, you can set up a design study, and the tool works asynchronously to show you the alternatives that fit your design criteria. Explore different material options to meet sustainability or cost constraints. Try different manufacturing processes, including machining and additive manufacturing, with a press of a button. An added bonus: Creo automatically works out the most desirable design domain. Whether you're an early-career engineer or a seasoned one, this tool ensures you never miss an idea. You can choose one of the solutions presented or make changes.

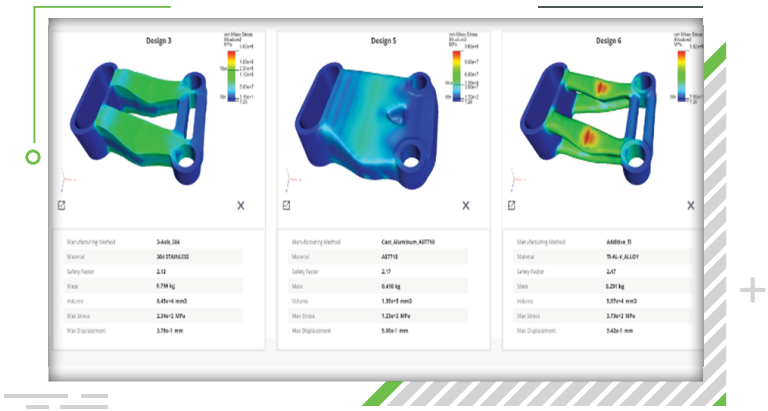

> DESIGN FOR ADDITIVE MANUFACTURING

Additive manufacturing means you can produce parts that would either be impossible with traditional methods or too costly or inefficient. Take lattices. It's no secret that lattices can help resolve issues with weight, strength, and efficiency. Using Creo's additive manufacturing capabilities you can include variable lattices, including metallic printing - and optimize them based on simulation results. Do it all within one design environment: Creo.

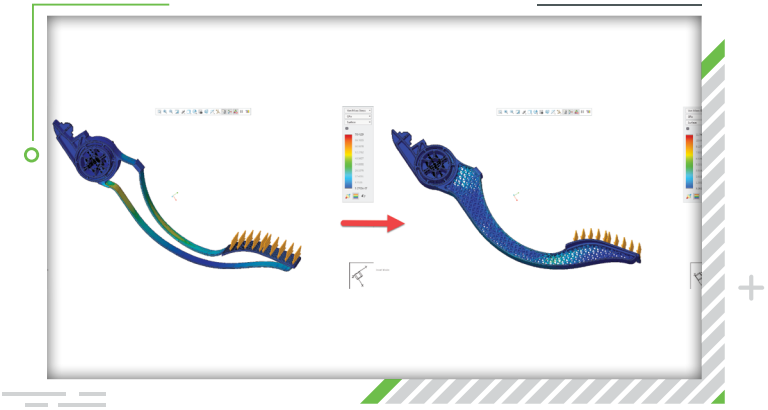

> ELECTRIFICATION

Automate, design and analyze cable, wire harnesses and piping & instrumentation systems. Electrification design uses a set of solutions to define 2D schematic logic, route 3D cabling and piping systems, speed the creation of harness manufacturing documentation and collaborate on PCB designs. Reduce operational costs, improve product quality and accelerate time-to-market with the help of electrification tools like Creo Schematics, Creo Piping and Cabling Extension, Creo Harness Manufacturing Extension, Creo Clearance and Creepage Extension, Creo ECAD-MCAD Collaboration module, and the PTC Product View ECAD suite.

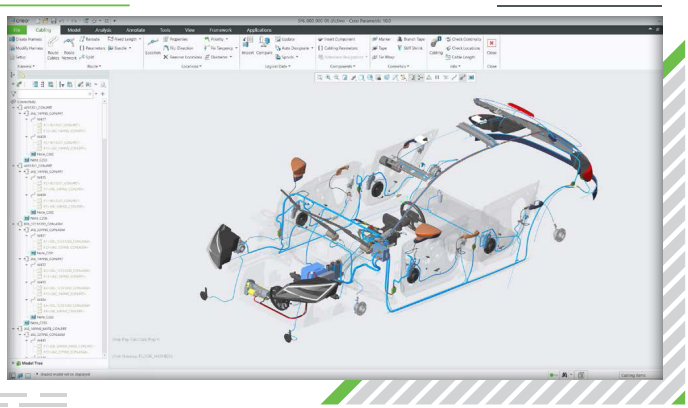

> COMPOSITE DESIGN

Composite materials help engineers achieve an ideal combination of strength, stiffness, and weight, but designing with them introduces a new level of complexity. Creo provides a comprehensive composite design environment that helps you move from concept to manufacturing with confidence. Define plies and cores, generate flat ply contours, simulate draping, and automatically create ply books, all within a single design workflow. Create solid geometry representing the composite shape while maintaining accurate ply-based mass properties throughout the design process

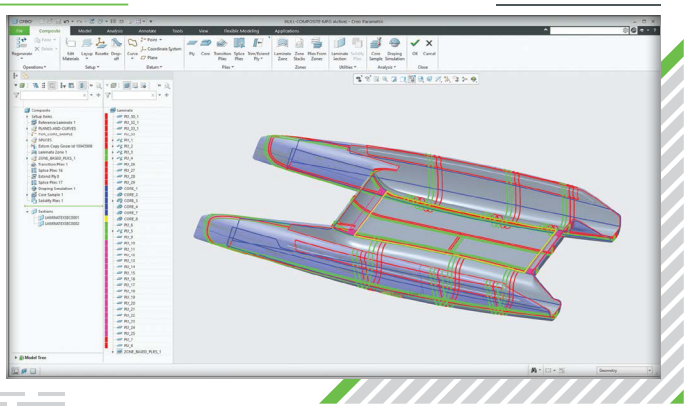

CONCLUSION

PTC pioneered parametric 3D modeling, and decades later we're still in front. Independent industry analysts continue to recognize PTC as a technology leader in CAD, validating our commitment to delivering the innovative capabilities engineers need to build the next generation of products.

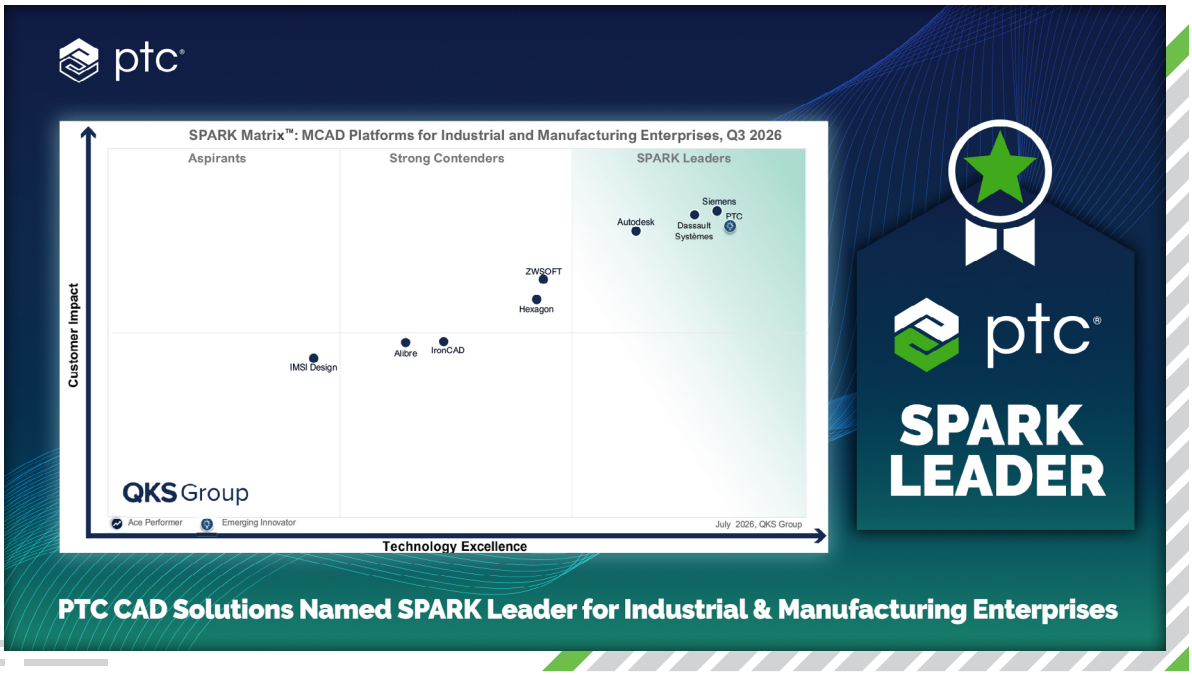

READ THE FULL REPORT →

Tens of thousands of companies worldwide rely on Creo to give them the newest, most innovative 3D CAD tools for their detailed design processes, as well as some of the most trusted. Creo leaves you, and everyone on your team, free to focus on product designs that will move your business forward.

> THE CREO ADVANTAGE

Creo is the 3D CAD solution that helps you accelerate product innovation to build better products faster. Easy-to-learn Creo uses a model-based approach to seamlessly take you from the earliest phases of product design to manufacturing and beyond. Combining powerful, proven functionality with new technologies like generative design, artificial intelligence, real-time simulation and advanced manufacturing, Creo helps you iterate faster, reduce costs and improve product quality. Creo is also available as a SaaS product, providing innovative cloud-based tools for real-time collaboration and streamlined license management and deployment. The world of product development moves quickly, and only Creo delivers the transformative tools you need to build competitive advantage and gain market share.

creo®

Try free trial now! CLICK HERE →

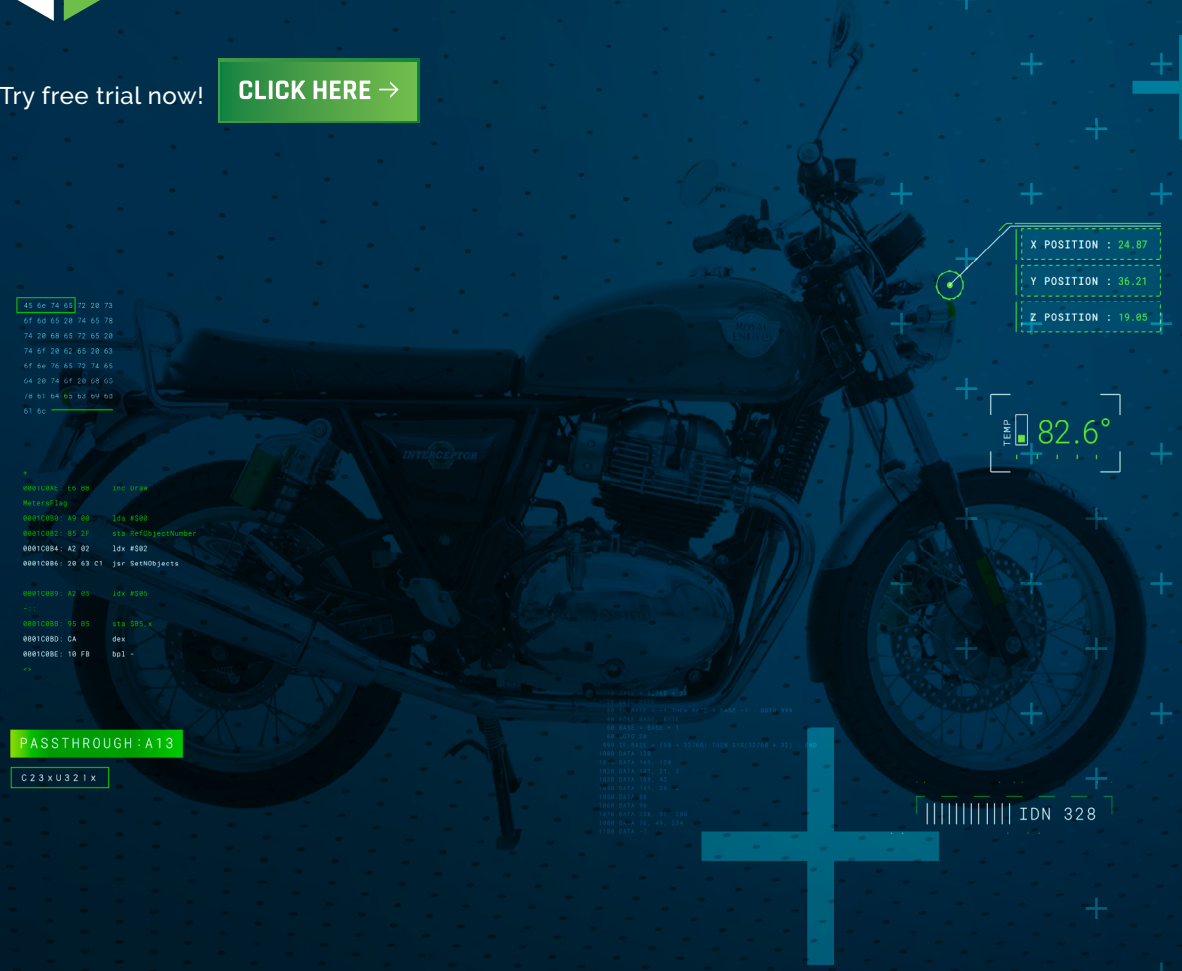

© 2026, PTC, Inc. All rights reserved. Information described herein is furnished for informational use only, is subject to change without notice, and should not be taken as a guarantee, commitment, condition or offer by PTC. PTC, the PTC logo, and all other PTC product names and logos are trademarks or registered trademarks of PTC and/or its subsidiaries in the United States and other countries. All other product or company names are property of their respective owners. 99300 CAD System Letting You Down